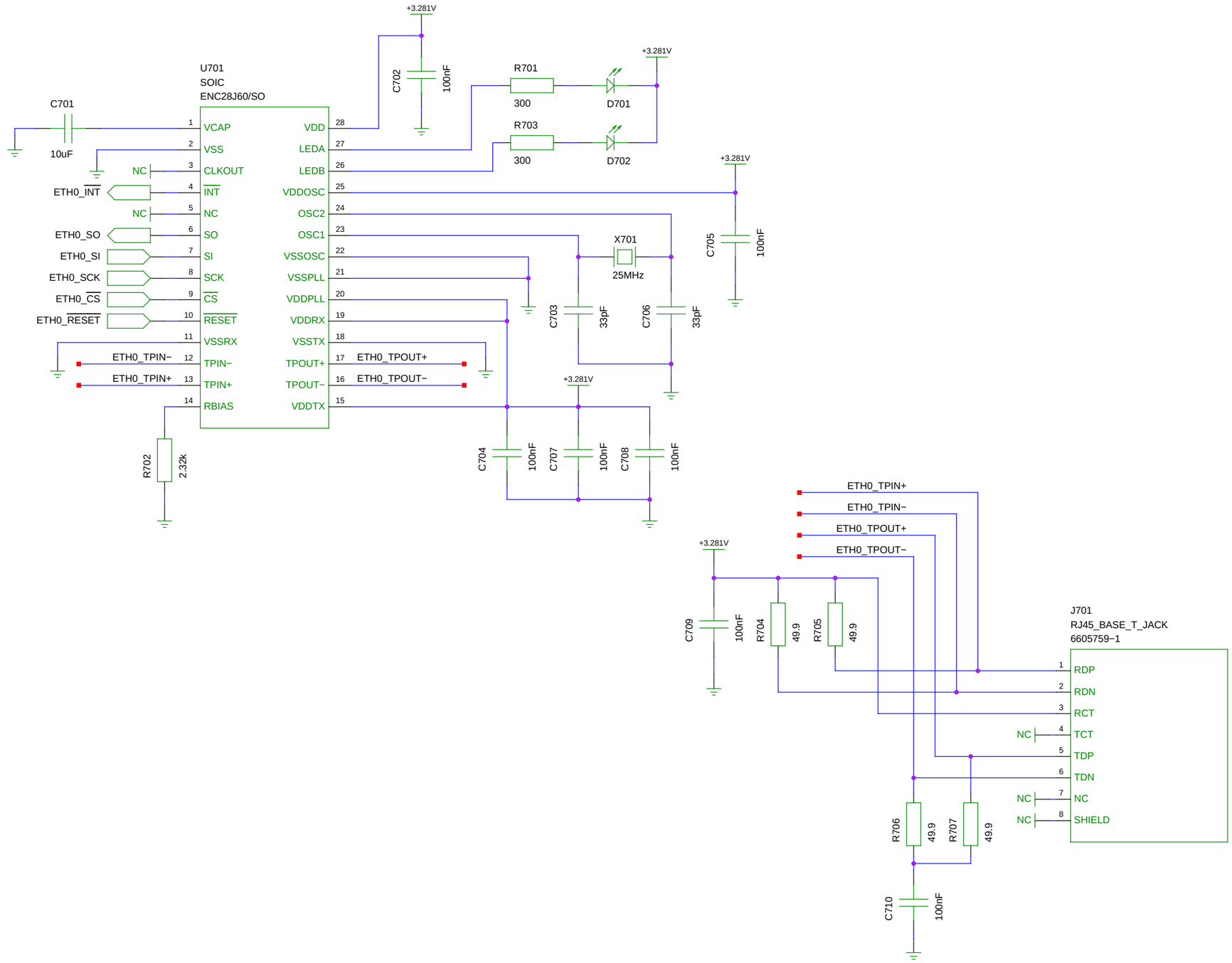

OpenARM SBC Ethernet Design	PowerCraft Technology Jelle de Jong <jelledejong@powercraft.nl>
TITLE 2008−09−10	GPLv3
FILE: ../openarm/ethernet.sch	REVISION: v0.1.2j
PAGE 07 OF 20	DRAWN BY: OpenARM SBC Project